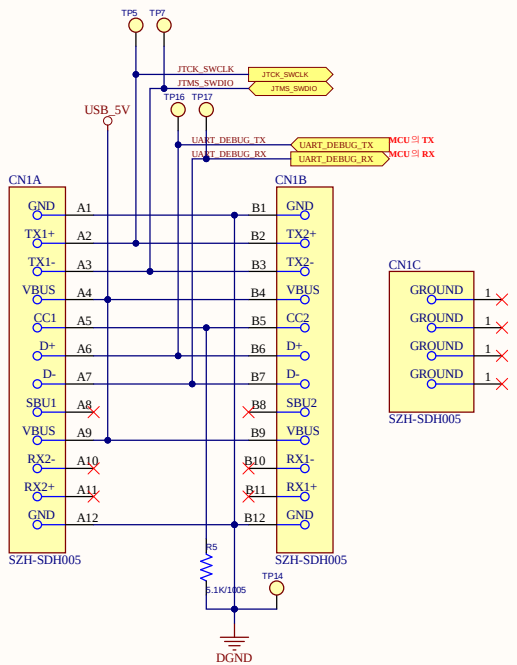

Type-C Connector(SWD & USB to Serial)

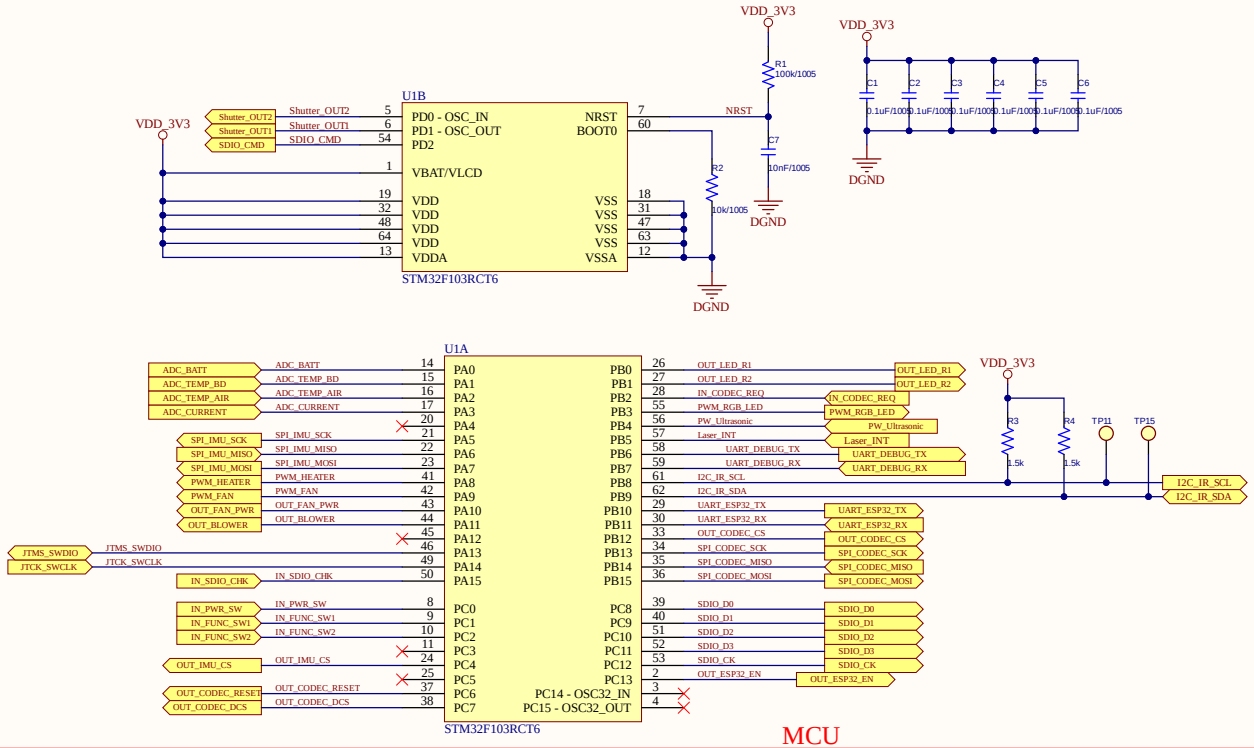

MCU

NOTE
1. Standard SMD Resistor Type : 1608(1/10W), ±1%(F)
2. Standard SMD Capacitor Type : 1608, 50V, X7R, ±10%(K))

Title	MCU & Multimedia		
Size: A3	Author: DW Yun	Revision: 01	
Date: 2024-01-31	Time: 오후 4:13:17	Sheet 1 of 5	
File: C:\Users\ams222008\Desktop\YDW_Project\WithForce\PCBA\REV04\WithForce_Main_REV04\PAGE01 - MCU.SchDoc			

WITHFORCE Inc.
816ho
82, Anyangpangyo-ro,
Uiwang-si, Gyeonggi-do,
Republic of Korea

WITHFORCE

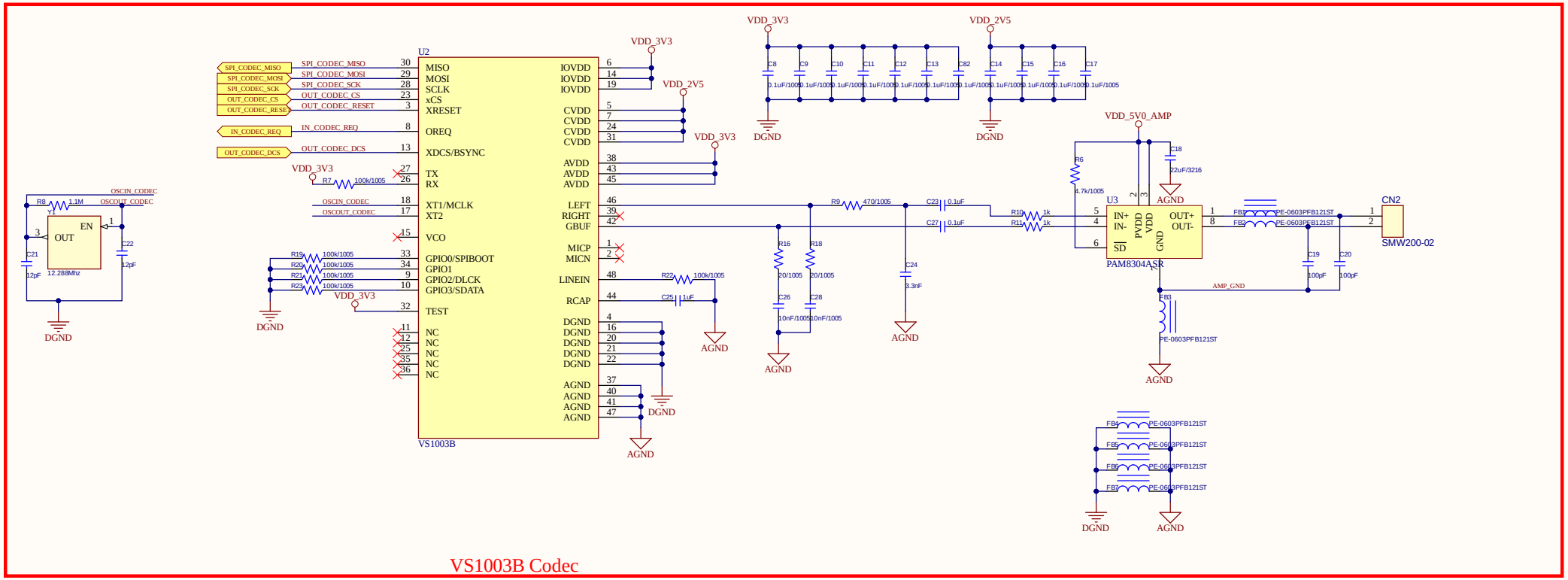

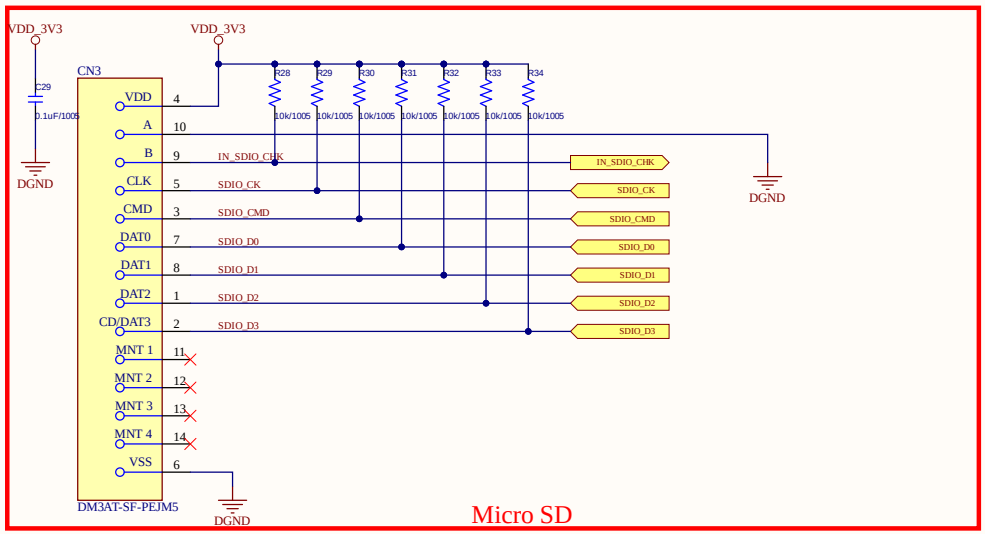

NOTE

1. Standard SMD Resistor Type : 1608(1/10W), ±1%(F)
2. Standard SMD Capacitor Type : 1608, 50V, X7R, ±10%(K))

Title	*Codec & MicroSD*		
Size: A3	Author: DW Yun	Revision:01	
Date: 2024-01-31	Time: 오후 4:13:17	Sheet 2 of 5	
File: C:\Users\ams222008\Desktop\YDW_Project\WithForce\PCBA\REV04\WithForce_Main_REV04\PAGE02 - Audio_SDCard.SchDoc			

WITHFORCE Inc.
816ho
82, Anyangpangyo-ro,
Uiwang-si, Gyeonggi-do,
Republic of Korea

WITHFORCE

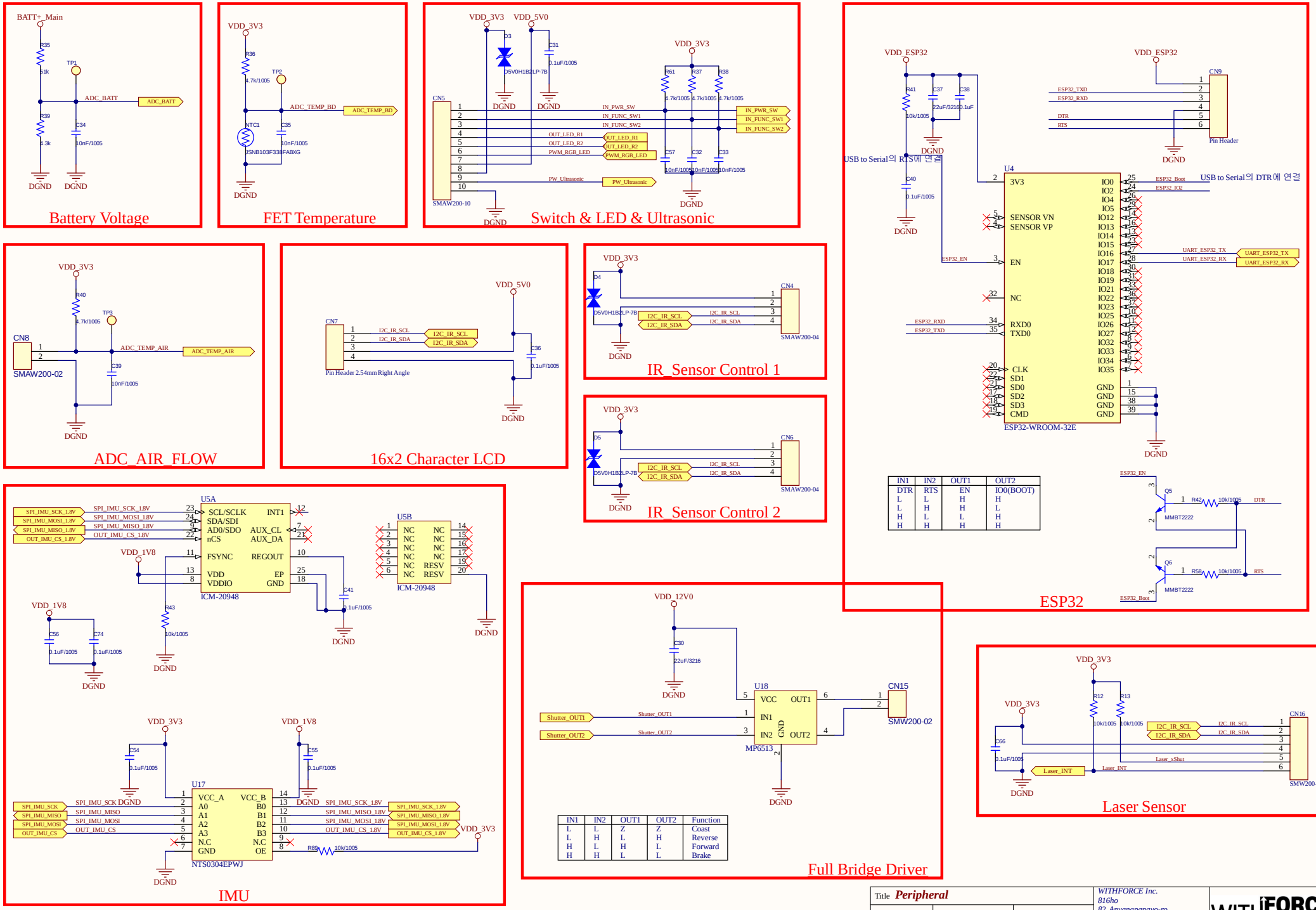
Battery Voltage
FET Temperature
Switch & LED & Ultrasonic
ESP32
ADC_AIR_FLOW
16x2 Character LCD
IR_Sensor Control 1
IR_Sensor Control 2
IMU
Full Bridge Driver
Laser Sensor
USB to Serial의 RTS에 연결
USB to Serial의 DTR에 연결
ESP32-WROOM-32E
ICM-20948
NTS0304EPWJ
MP6513
SMW200-02
SMW200-06
SMAW200-04
SMAW200-10
Pin Header
Pin Header 2.54mm Right Angle
Title Peripheral
Size: A3
Author: DW Yun
Revision:01
Date: 2024-01-31
Time: 오후 4:13:17
Sheet 3 of 5
File: C:\Users\ams222008\Desktop\YDW_Project\WithForce\PCBA\REV04\WithForce_Main_REV04\PAGE03 - Peripheral.SchDoc
WITHFORCE Inc.
816ho
82, Anyangpangyo-ro,
Uiwang-si, Gyeonggi-do,
Republic of Korea
WITHFORCE

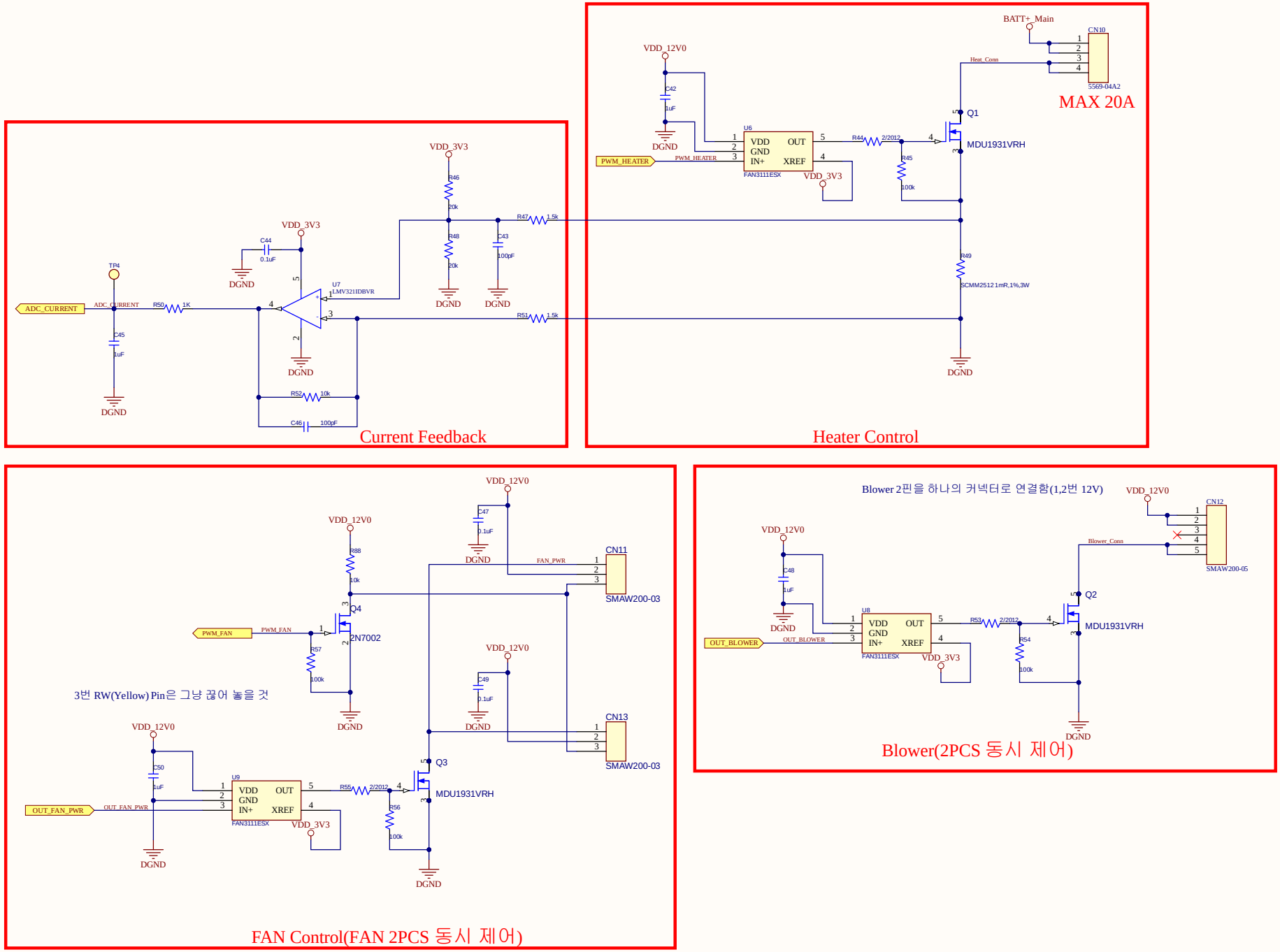

Title	***Heater & FAN***		*WITHFORCE Inc.* *816ho* *82, Anyangpangyo-ro,* *Uiwang-si, Gyeonggi-do,* *Republic of Korea*
Size: A3	Author: DW Yun	Revision:01	
Date: 2024-01-31	Time: 오후 4:13:17	Sheet 4 of 5	
File: C:\Users\ams222008\Desktop\YDW_Project\WithForce\PCBA\REV04\WithForce_Main_REV04\PAGE04 - Heater_FAN.SchDoc			

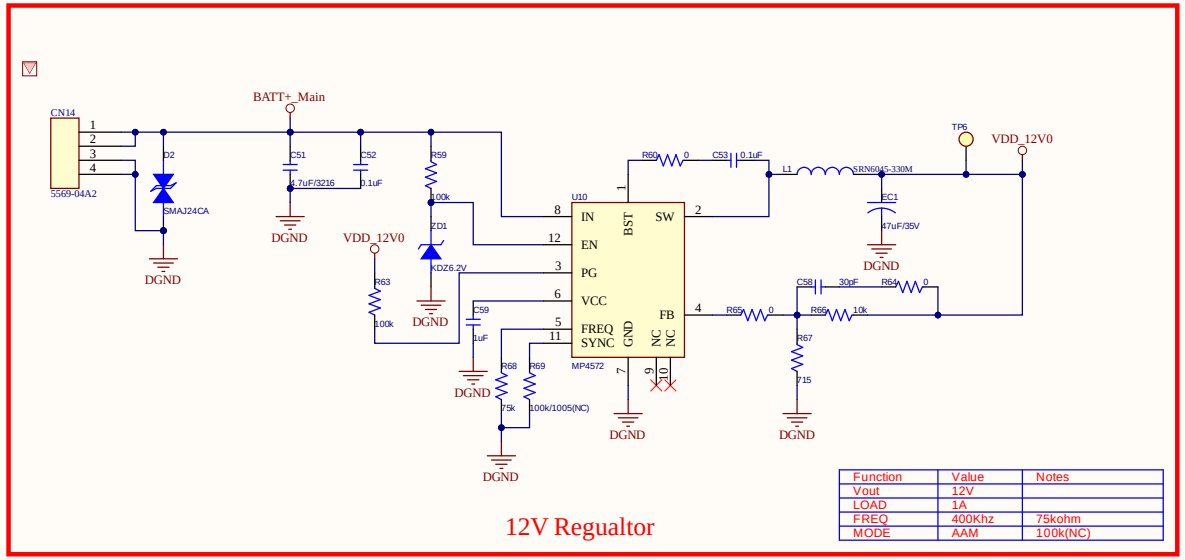

12V Regualtor

Function	Value	Notes
Vout	12V	
LOAD	1A	
FREQ	400Khz	75kohm
MODE	AAM	100k(NC)

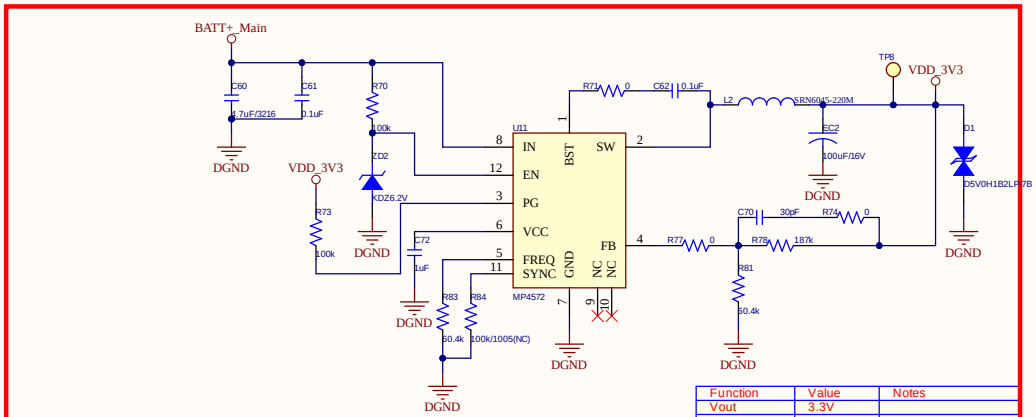

3.3V Regualtor(MCU&Ultrasonic)

Function	Value	Notes
Vout	3.3V	
LOAD	0.1A	
FREQ	500Khz	60kohm
MODE	AAM	LightLoad(100k(NC))

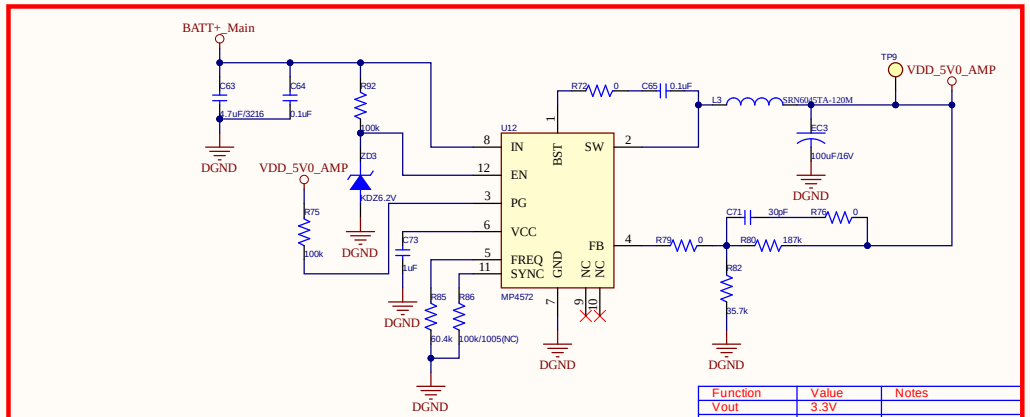

3.3V Regulator(AMP)

Function	Value	Notes
Vout	3.3V	
LOAD	0.1A	
FREQ	500Khz	60kohm
MODE	AAM	LightLoad(100k(NC))

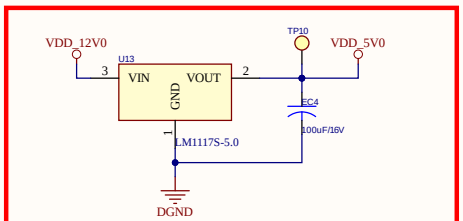

5V Regulator(LCD&RGB LED)

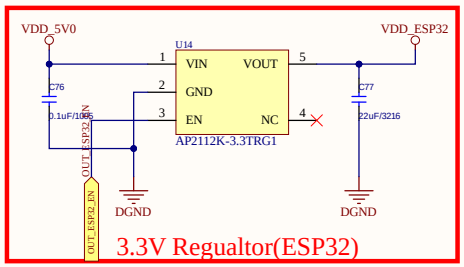

3.3V Regualtor(ESP32)

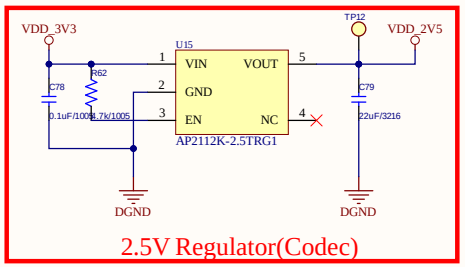

2.5V Regulator(Codec)

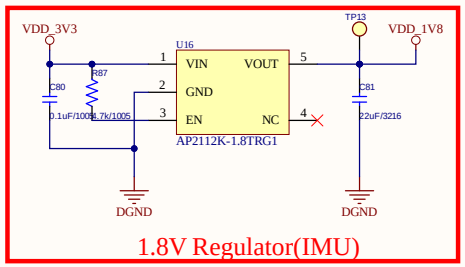

1.8V Regulator(IMU)

Title: *WithForce*		
Size: A3	Author: DW Yun	Revision: 01
Date: 2024-01-31	Time: 오후 4:13:17	Sheet 5 of 5
File: C:\Users\ams222008\Desktop\YDW_Project\WithForce\PCBA\REV04\WithForce_Main_REV04\PAGE05 - Power.SchDoc		

WITHFORCE Inc.
816ho
82, Anyangpangyo-ro,
Uiwang-si, Gyeonggi-do,
Republic of Korea

WITHFORCE